DEI-627LE

-Version 01-

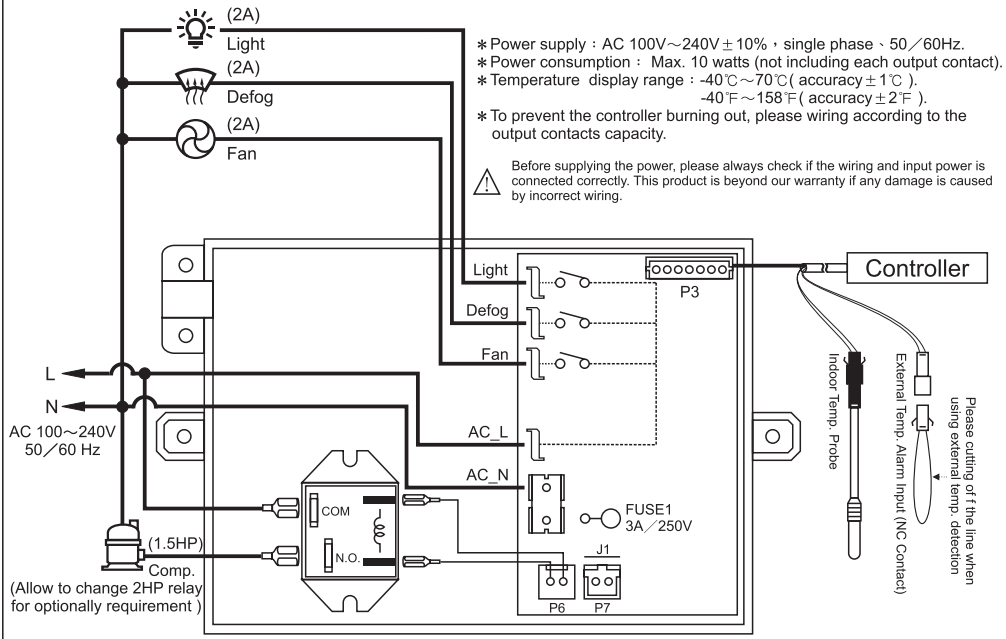

- Power supply：AC 100V～240V±10%，single phase、50／60Hz.
- Power consumption： Max. 10 watts (not including each output contact).
- Temperature display range：-40℃～70℃(accuracy±1℃).
  -40℉～158℉(accuracy±2℉).
- To prevent the controller burning out, please wiring according to the output contacts capacity.

⚠ Before supplying the power, please always check if the wiring and input power is connected correctly. This product is beyond our warranty if any damage is caused by incorrect wiring.

This product is Researched/Developed & Produced by Taiwan DEI company with ISO-9001 certification.

5LABLL00640